MXC-FGX-TK1

HD-SDI FRAME GRABBER WITH 325 GFLOPS TEGRA-K1 CUDA PROCESSING ENGINE

Key Features

- NVIDIA® Tegra-K1 Embedded APU for complex image capture processing
- WOLF Frame Grabber eXtreme (FGX) Embedded FPGA capture engine
- 325 GFLOPs CUDA processing
- APU accelerated H.264 encoding
- Advanced power management (tunable as low as 10 watts)

Additional Features

- NVIDIA® Tegra-K1 Embedded APU
  - 5 ARM processor cores
  - Kepler 192-core GPGPU
  - 8GB DDR3L memory
  - 32GB Embedded Flash
- 2× HD-SDI input (SMPTE-292M)
- 1× HD-SDI output (SMPTE-292M); Optionally can be mirrored to a second output
- 1× HDMI output
- 1× USB 2.0 interface
- 2× UART interfaces
- 1× 10/100/1000 Ethernet up to USB 2.0 speeds (480Mbps)
- Embedded Linux environment

Specifications

- High level of ruggedization
  - MIL-STD-810, IPC 6012 Class-3
  - -40° to +85°C operating temperature
  - 40g, 11ms shock
  - 0.2g²/Hz@ 5 - 2000Hz vibration
  - Conduction-cooled
- MXC form factor: 85×70 mm

Overview

WOLF's MXC-FGX-TK1 is a revolution in image capture and processing for aerospace and defense, leveraging NVIDIA's 28nm Tegra-K1 APU packed with five ARM cores, 8GB low voltage DDR3L memory and 325 GFLOPs of CUDA processing using as little as 10 Watts.

This HD-SDI Frame Grabber eXtreme (FGX) allows complete control of captured image data for complex analysis and pre-processing independent of the host Intel or PowerPC SBC.

This module is designed as an ancillary processor module, for integration onto VITA 46.0 VPX carriers, COM Express baseboards, or operating as a stand-alone board. The MXC-FGX-TK1 captures HD-SDI video – SMPTE-292M – for encode as an H.264 transport stream or GPU processing and displaying as HD-SDI or HDMI.

The MXC-FGX-TK1 thrives in rugged environments performing precision-intensive operations, such as image processing, video stabilization, filtering, terrain analytics, 3D visualization of geospatial data, object recognition and tracking.

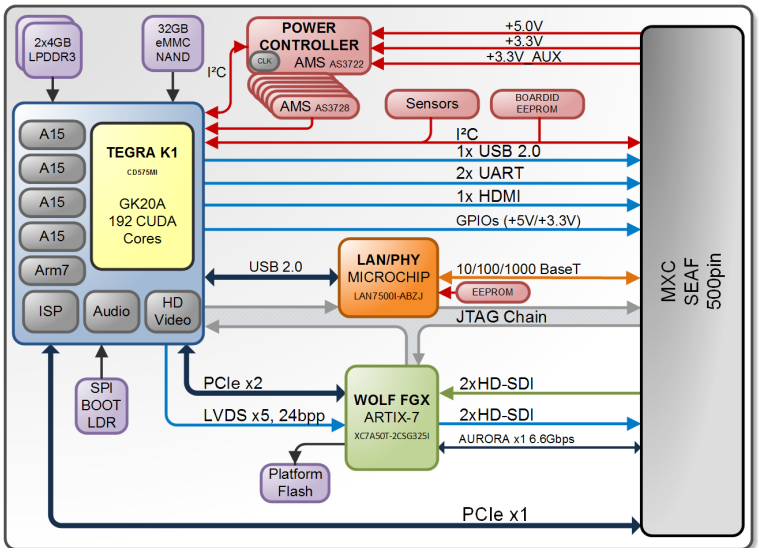

WOLF ADVANCED TECHNOLOGY

www.WOLFAdvancedTechnology.com

sales@wolf-at.com | International: +1 (905) 852-1163 | USA Toll-Free: 1 (800) 931-4114

document version: 20170307