GE
Intelligent Platforms

SBC325

3U OpenVPX 3rd Generation Intel® Core™ i7 based Single Board Computer

Features

- 3U OpenVPX Single Board Computer
- 3rd Generation Intel Core i7 quad core processor
- Dual-channel DDR3 (up to 16 GB) @ 1333 MHz memory with ECC
- Up to 32 GB NAND Flash
- 512 kB MRAM (non-volatile storage)
- Multiple PCIe fabric backplane configurations
  - x16 PCIe GEN 2 option (no XMC) *
  - 4x PCIe GEN 2 with DMA / NTB capability, also GEN 1 x1 PCIe
- 1x XMC Site with I/O *
- 2x 10/100/1000BaseT *
- HD Audio *
- 2x RS-232/422 COM ports
- 1x PS/2 Keyboard and mouse *
- 2x SATA (6 Gb/s) *
- 1x VGA *
- 4x USB 2.0 *
- 6x Single-Ended GPIO (5V tolerant) *
- Watchdog, Timers, Sensors
- BMM (Board Management Microcontroller), ETI, TPM
- VITA65 OpenVPX Compatible
  - MOD3-PAY-2F2T-16.2.5-3
  - MOD3-PAY-2F-16.2.7-1
- Deployed Test Software
- Windows®, Linux® and Real-Time OS support
- Five Levels of Ruggedization

* Mux'd signals – see specifications for clarification

The SBC325 Rugged Single Board Computer (SBC) from GE Intelligent Platforms features the high performance, highly integrated 3rd Generation Core i7 processor platform from Intel.

3rd Generation Core i7 with fully integrated graphics and memory controller plus quad core processing at 2.1 GHz offers better performance per watt — all in one device. Coupled with an Intel mobile chipset, this provides an unmatched level of I/O bandwidth for both on-board and off-board functions.

Features of the 3rd Gen Core i7 processor

- Up to 15% (compute) and 50% (3D graphics) performance improvement over previous generation
- Advanced Vector Extensions (AVX) signal processing
- Intelligent performance on-demand with Intel Turbo Boost Technology
- PCIe GEN 3 (8 GT/sec) data transfer capability
- Hyper-Thread Technology – 2 threads per core

In addition to a comprehensive range of onboard IO features, the SBC325 also offers an on-board XMC mezzanine expansion site for enhanced system flexibility. Memory resources include up to 16 GB DDR3 SDRAM with ECC, 32 GB NAND Flash, and hard drive via XMC.

The SBC325 is designed to meet the requirements of a wide range of applications from industrial to fully rugged Defense and Aerospace programs. It offers extended temperature capability and a range of air and conduction cooled build levels.

A rich software choice is planned for the SBC325, including comprehensive Deployed Test Software (BIT and BCS) plus OS support for Windows 7, Open Linux, Wind River Linux, and VxWorks®.

SBC325 - 3U OpenVPX 3rd Generation Intel Core i7 based Single Board Computer

Block Diagram (Default configurations shown, call factory for other options)

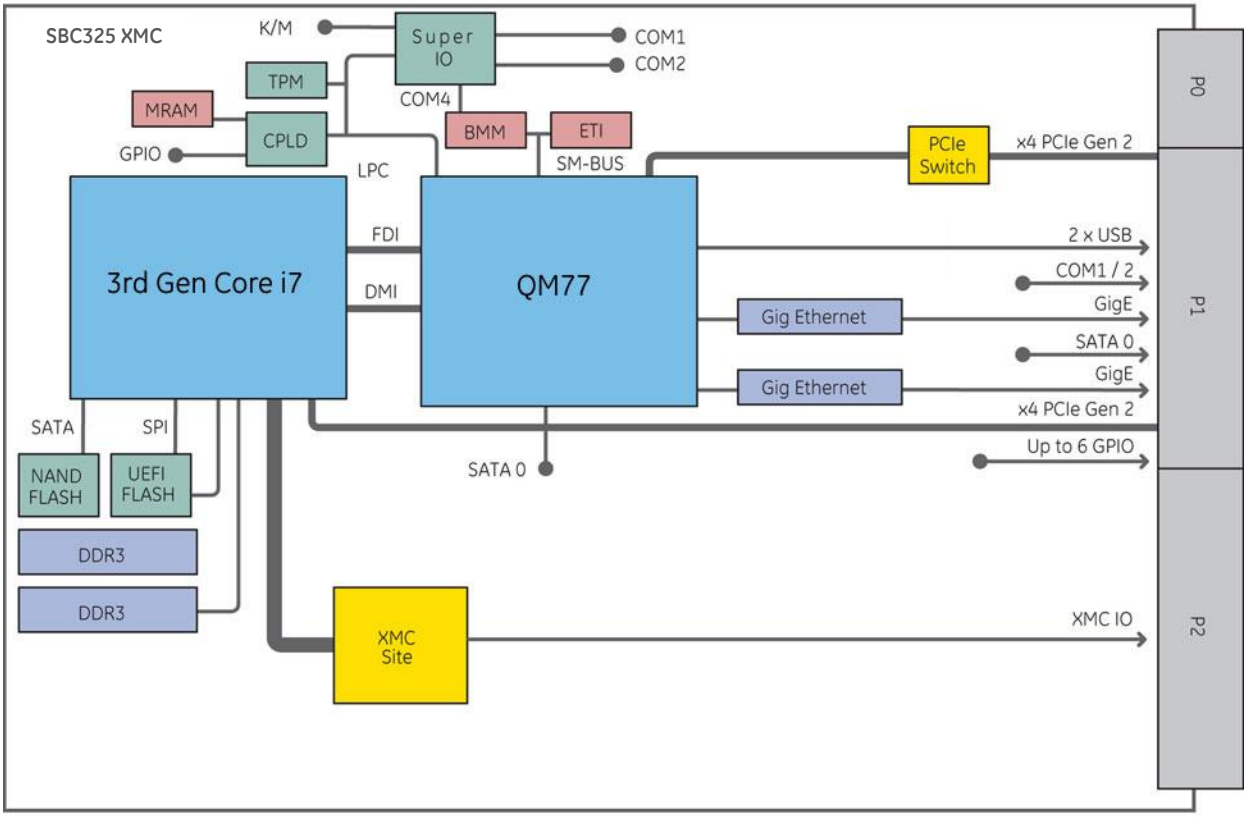

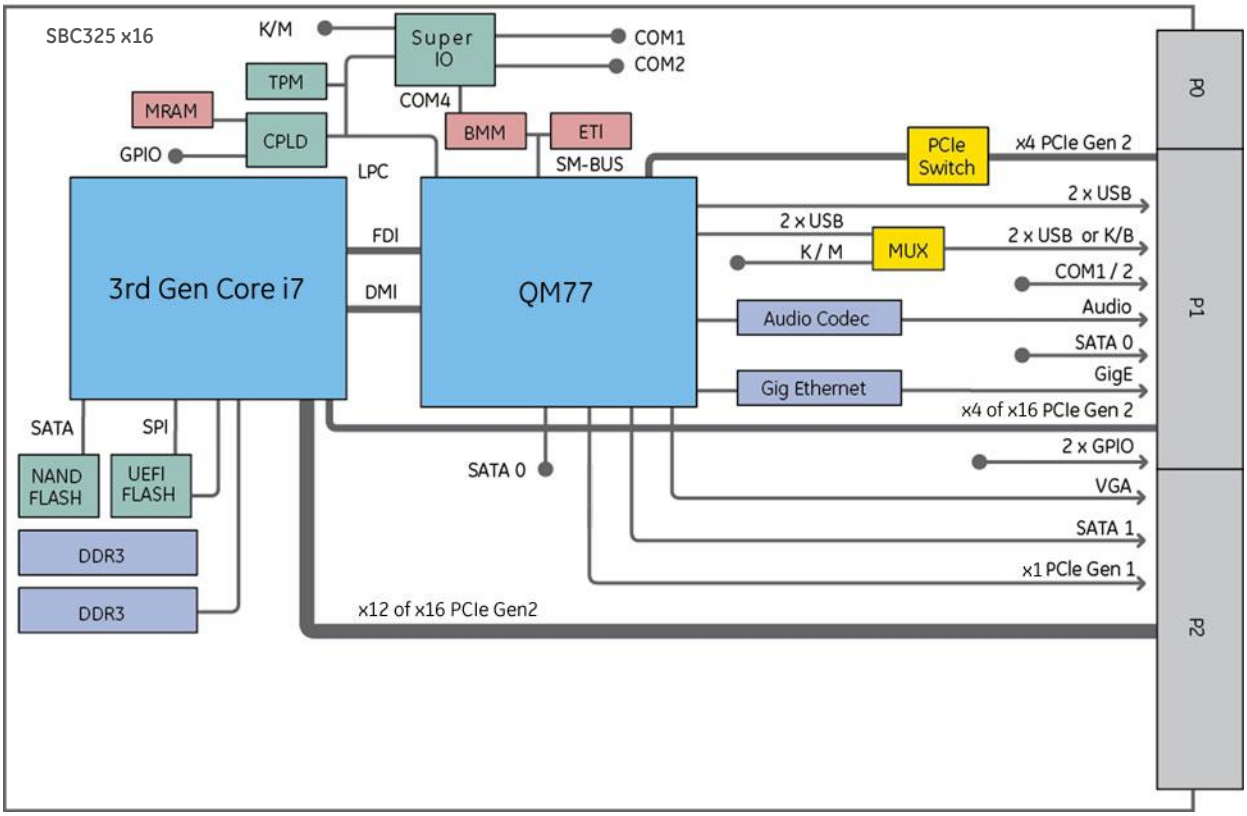

SBC325 - 3U OpenVPX 3nd Generation Intel Core i7 based Single Board Computer

Specifications

Processor
- Intel 3rd Gen. Core i7 Processor
  - i7-3612QE (Quad core) @ 2.1 GHz (35W) (Actual speed/power depends on environment)
- 22nm monolithic die processing technology
- 6 MB Last Level Cache

SDRAM
- Maximum memory configuration of up to 16 GB DDR3 SDRAM @ 1333 MHz soldered with ECC

Flash Memory
- Soldered NAND flash array up to 32 GB

Ethernet
- Dual Gigabit Ethernet interface via Intel's 82574
- Gigabit Ethernet controllers – routed to VPX P1
- 1x multiplexed with audio port

USB Ports
- Up to 4x USB 2.0 ports routed to VPX P1
- 2x ports available if GPIO and PS/2 are utilized

Fabric Interface
- Allows high speed PCI Express connections to other cards in the system
  - x4 PCIe VPX P1; DMA and configurable as Non-Transparent (NTB) for peer-to-peer capability
  - x4 / x12 PCIe (split across P1/P2), x16 available without XMC
  - Also GEN 1 x1 PCIe

Keyboard and Mouse
- 1x PS/2 port routed to P1, multiplexed signal with USB

OpenVPX Profile
- Module Profile: MOD3-PAY-2F2T-16.2.5-3
- Module Profile: MOD3-PAY-2F-16.2.7-1

Serial Ports
- Two 16550 compatible full duplex async serial ports
  - COM1 routed to VPX P1 RS-232/422
  - COM2 routed to VPX P2 RS-232/422
- Ports feature independent 16-byte FIFO supporting baud rates up to 115 Kbaud

Serial ATA
- 2x SATA Revision 3.0 capable (6 Gb/s)
- One routed to VPX P1; the other to VPX P2
- Port on P2 is a multiplexed signal with XMC IO

Audio
- High Definition Audio Codec
- Stereo line in and stereo line out
- Multiplexed with one Ethernet port

Video Controller
- 1x VGA port routed to VPX P2; multiplexed signal with XMC IO

General Purpose I/O
- Up to 6x GPIO (P1 rear IO), TTL 5V tolerant GPIO each capable of generating an interrupt; multiplexed with USB

XMC Expansion Slot
- x8 PCIe XMC site (P2 rear IO)
- 8 differential pairs, plus 12 differential pairs, plus 24 single-end signals

LED
- 1x power
- 4x BIT status (software control)

NVRAM / RTC / Watchdog / ETI / TPM / BMM
- 512kB non-volatile RAM (MRAM)
- Real-time clock in CPLD (software programmable)
- Watchdog timer (software programmable)
- Elapsed Time Indicator (record power cycles and on-time)
- TPM (Trusted Platform Module)
- Baseboard Management Controller

LED
- 1x power
- 4x BIT status (software control)

Power Requirements
- +5V / 3.3V required
- +/-12V for XMC/PMC module only

Temperature Sensor
- Onboard ambient temperature; CPU

Note: The SBC325 is designed to provide flexibility and scalability to the user. Use of the XMC I/O affects the availability of other I/O features. Due to the nature of multiplexed signals, I/O configurations also may be limited. Please contact your GE

	SBC325-xxxx0xxx	SBC325-xxxx1xxx	
XMC IO	1	-	
x16 PCIe	-	1	
x4 PCIe	2	1	
x1 PCIe	-	1	
COM	2	2	
USB	2	Either / or	2
K / M	-		1
GigE	2	1	
Audio	-	1	
SATA	1	2	
VGA	-	1	
GPIO	6	2	

Environmental

	Level 1	Level 2	Level 3	Level 4	Level 5
Cooling Method	Convection	Convection	Convection	Conduction	Conduction
Conformal Coating	Optional	Standard	Standard	Standard	Standard
High/Low Temp	0 to +55° C	-20 to +65° C	-40 to +75° C	-40 to +75° C	-40 to +85° C
Operational	(300 ft/m)	(300 ft/m)	(600 ft/m)	At cold wall	At cold wall
Random Vibration	$0.002g^2$/Hz*	$0.002g^2$/Hz*	$0.04g^2$/Hz**	$0.1g^2$/Hz**	$0.1g^2$/Hz**
Shock	20g***	20g***	20g***	40g***	40g***

* With a flat response to 1000 Hz, 6 dB/Oct roll-off from 1000 to 2000 Hz ** From 10 to 1000 Hz *** Peak sawtooth 11 ms duration

Note: Processor performance and temperature are inter-dependent. For a given temperature, a maximum processor speed is achievable, and conversely for a given processor speed, a maximum temperature is achievable. Consult the product manual for details.

About GE Intelligent Platforms

GE Intelligent Platforms, a General Electric Company (NYSE: GE), is an experienced high-performance technology company and a global provider of hardware, software, services, and expertise in automation and embedded computing. We offer a unique foundation of agile, advanced and ultra-reliable technology that provides customers a sustainable advantage in the industries they serve, including energy, water, consumer packaged goods, government and defense, and telecommunications. GE Intelligent Platforms is a worldwide company headquartered in Charlottesville, VA and is part of GE Home and Business Solutions. For more information, visit defense.ge-ip.com.

GE Intelligent Platforms Contact Information

Americas: **1 800 433 2682** or **1 434 978 5100**
Global regional phone numbers are listed by location on our web site at defense.ge-ip.com.

defense.ge-ip.com

03.13 GFA-1903