GE
Intelligent Platforms

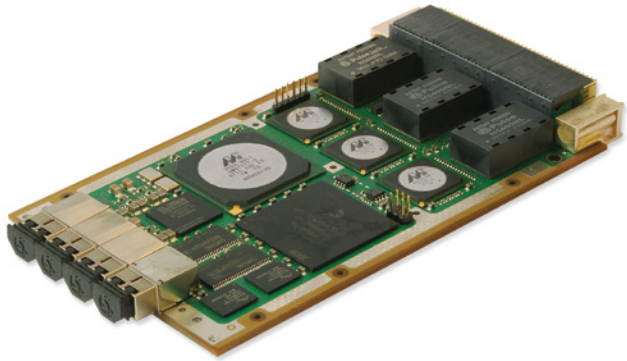

NETernity™ GBX410

3U VPX Managed 16-port Gigabit Ethernet Switch

Features

- 16-port fully managed Gigabit Ethernet switch
- Twelve 10/100/1000BaseT GigE ports via the backplane
- Four 1000BaseSX or 1000BaseLX via the front panel
- Two 10 Gigabit uplink ports for expansion
- Expands to 32-port non-blocking solution
- Layer 2/3 switching with advanced support for VLANs, QoS and IPv6
- 72 Gbits/sec non-blocking switch fabric with full wirespeed performance
- 10G uplink ports can be XAUI
- Configuration through Web interface
- Unmanaged version also available
- Supports IPv6 switching/routing
- Support of Jumbo frames of up to 10 KB
- Remote management support (Telnet, SSH and SNMP)
- Built-in-Test (BIT) software
- RoHs compliant
- OpenVPX compatible

Key Specifications

- IEEE 802.3-2005
  - IEEE 802.3ad (Link aggregation)
- IEEE 802.1D (Prioritization)
- IEEE 802.1Q (VLAN tagging)
- IEEE 802.1D (Spanning Tree Protocol)

The NETernity GBX410 is a fully managed (Layer 2/3) Gigabit Ethernet switch designed to meet the most demanding requirements for network switching in tactical applications. This Gigabit switch is available in both air- and conduction-cooled formats and features a non-blocking shared memory architecture. This provides 72 Gbits/second core offering full wire speed performance with minimal latency on all ports simultaneously.

The GBX410 has comprehensive management capabilities that include VLANs, Link Aggregation, Spanning Tree, IPv4, IPv6, Traffic Policing, Quality of Service (QoS), Guaranteed Bandwidth and SNMP. The GBX410 can be expanded to a 32-port non-blocking solution by connecting two GBX410s together via the integral 10 Gigabit XAUI ports.

Onboard built-in-test (BIT) ensures the GBX410 can be easily linked with other boards to provide integrated system level health monitoring and diagnostics.

The switch management may be accessed via in-band management through the 1G ports, or via out-of-band management. Out-of-band management of the switch is accessible via 10/100 BaseT Ethernet port and RS232 serial port, both available at the rear VPX connectors.

The GBX410 has comprehensive network management capabilities.

Configuration of the switch is via a comprehensive and intuitive web interface, command line interface or SNMP.

NETernity GBX410 – 3U VPX Managed 16-port Gigabit Ethernet Switch

Specifications

Ports
- 12 10/100/1000-BaseT via rear I/O
- One 10/100-BaseT Management port
- Two RS232
- JTAG + UTIL (for firmware update)
- Four 1000BaseSX or 1000BaseLX on Front Panel optionally available
- Two 10GigE XAUI ports available

PowerPC Management Processor
- Enables GBX410 to be set up for specific customer configurations

Up to 72 GBits/sec non-blocking switch with full wire speed performance
- Network performance not 'bottlenecked' by the switch

Store and forward switching architecture
- Lowest possible latency

8000 MAC address table
- Automatically learns network connections

User controllable built-in test (BIT)
- Ease of integration with other boards

Bandwidth Provisioning
- Guaranteed bandwidth for real-time services

3U VPX form factor
- Maximum number of ports to rear connectors
- VITA 46.0
- Pinout i.a.w. VITA 46.20 (proposed)

OpenVPX™
- SLT3-SWH-2F12T-14.4.8

Compliance
- IEEE 802.3-2000

Architecture
- Shared memory, store-and–forward

Auto Learning
- 8000 MAC addresses

Management Features
- IEEE 802.1 Multiple Spanning Tree, IGMP snooping, port mirroring, IEEE 802.3 VLAN tagging, Link Aggregation
- Advanced QoS features including bandwidth provisioning and 802.1Q VLAN, SNMP v1/v2/v3 and web-based browser

Power (maximum)
- Twelve 10/100/1000BaseT ports 27 watts
- Twelve 10/100/1000BaseT + 4 1000BaseSX ports 29.6 watts
- Twelve 10/100/1000BaseT + 4 1000BaseSX + 2 10GigE ports 30.6 watts

Levels of Ruggedization
- Air Cooled, Extended Temperature, Rugged Air Cooled, and Rugged Conduction Cooled

Block Diagram

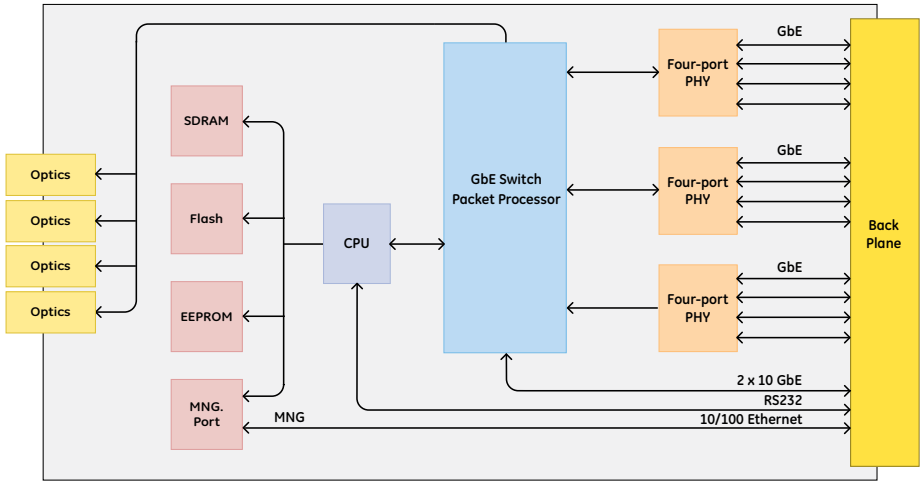

Ordering Information

GBX410 – ABCDE
- A designates the Rugged level which can be 1, 2, 3, 4 or 5
- B designates front panel option: 1=0.8" pitch (LVL 1, 2, 3, 4 and 5), 3=VITA46 1.0" pitch (Rugged LVL1, 2 or 3), 6=VITA48.1 1.0" pitch (Rugged LVL 1, 2 or 3)
- C designates GigE port configuration: C = 1 would be 12 copper + four 1000BaseSX; C = 2 would be 12 copper and four 1000BaseLX; C = 3 would be 12 copper ports only
- D is reserved and equals 0
- E designates management software choice: E = 0 no management software, E = 1 loads switch management software. BIT software is included on all models.

GBX410XRTM-11	Rear transition module for GBX410 with Ethernet management, two 10GigE copper (PCI Express connectors) and 12 GigE copper ports, 6U VPX form factor, 0.8" pitch front panel
GBX410XRTM-13	As above, but with VITA 46.1" pitch front panel
GBX410XRTM-16	As above, but with VITA 48.1" pitch front panel
GBX410CRTM-11	Rear transition module for GBX410 with Ethernet management, two 10GigE copper (CX4 connectors) and 12 GigE copper ports, 6U VPX form factor, 0.8" pitch front panel
GBX410CRTM-13	As above, but with VITA 46.1" pitch front panel
GBX410CRTM-16	As above, but with VITA 48.1" pitch front panel
GBX410XIOKIT	Kit for GBX410 rear transition modules providing connections for Out-of-Band Ethernet and six Ethernet ports

Example configurations are:

GBX410-13101	GBX410 LVL1 build with twelve copper rear I/O ports and four 1000BaseSX on front panel, VITA46 1.0" pitch front panel and management software.
GBX410-41300	GBX410 LVL4 build with twelve copper rear I/O ports, conduction cooled, 0.8" pitch and no management software.

GE Intelligent Platforms Contact Information

Americas: **1 800 433 2682** or **1 434 978 5100**
Global regional phone numbers are listed by location on our web site at **www.ge-ip.com/contact**

www.ge-ip.com

02.13 GFA-808A