XMC-E9170-SDI-2IO

WOLF ADVANCED TECHNOLOGY

Chip-Down Design

AMD Radeon® E9170, Includes 2 SDI Inputs & 2 SDI Outputs

Preliminary Information

Key Features

- AMD Radeon 1.25 TFLOPS GPU
- Chip-down rugged design, MIL-STD-810
- Up to two 3G-SDI inputs and two 3G-SDI outputs
- Additional inputs and outputs
- Dynamic power management (DPM) with real-time operating power control from 20 - 55W (default: 25W)

Additional Features

- Additional inputs: CVBS or STANAG 3350
- Additional outputs: DisplayPort 1.4, HDMI 2.0b, DVI
- 5 DisplayPort 1.4 digital video outputs:
  - ☐ support for High Dynamic Range (HDR) video
  - ☐ 4K at 60Hz with 10-bit color depth
- GPGPU parallel processing:
  - ☐ Eight compute units, 512 shaders (Stream Processors)
  - ☐ DirectX® 12, OpenCL™ 1.2, OpenGL 4.5, Vulkan
  - ☐ AMD's HIP Tools for NVIDIA® CUDA™ code reuse
- 4 GB GDDR5 memory, width: 128-bit
- Memory clock 1500 MHz, bandwidth: 48 GB/s
- Support for HEVC (H.265) and AVC (H.264) hardware encode/decode, 4K at 60Hz
- PCIe x8 Gen3

Specifications

- High level of ruggedization:
  - ☐ Rugged air-cooled or conduction-cooled
  - ☐ Operating temperature: -40° to +85°C
  - ☐ Vibration (sine wave): 10G peak, 5 - 2000Hz
  - ☐ Shock: 30G peak for air-cooled, 40G peak for conduction-cooled
- Front I/O and Rear I/O configurations
- Windows and Linux drivers
- RTOS drivers available: VxWorks, Integrity, LynxOS, and others
- VITA 46.9 I/O compliant mapping for 3U and 6U VPX configurations
- Available as XMC 1.0 or XMC 2.0 configurations

Overview

WOLF's versatile Video Processing Unit (VPU) board includes both an advanced AMD Radeon E9170 GPU and WOLF's Frame Grabber eXtreme (FGX). This board accepts multiple simultaneous inputs, including 3G-SDI, CVBS or STANAG 3350. The video data can be routed to the AMD Radeon GPU for processing or encoding, and then output in several formats, including 3G-SDI, DisplayPort, HDMI or DVI.

The WOLF Frame Grabber eXtreme (FGX) is the engine that provides the board with conversion of video data from one standard to another, with a wide array of video input and output options for both cutting-edge digital I/O and legacy analog I/O. The FGX has direct memory access (DMA) to the AMD Radeon's GPU memory for GPU processing and complex analysis. By including both the versatile FGX and a high performance GPU on one board WOLF's I/O and processing solution avoids the SBC data rebroadcast traffic jams that commonly occur with a 2-board solution.

RTOS drivers are available for this board, including VxWorks, Integrity, LynxOS, and others on request. Windows and Linux drivers are also available.

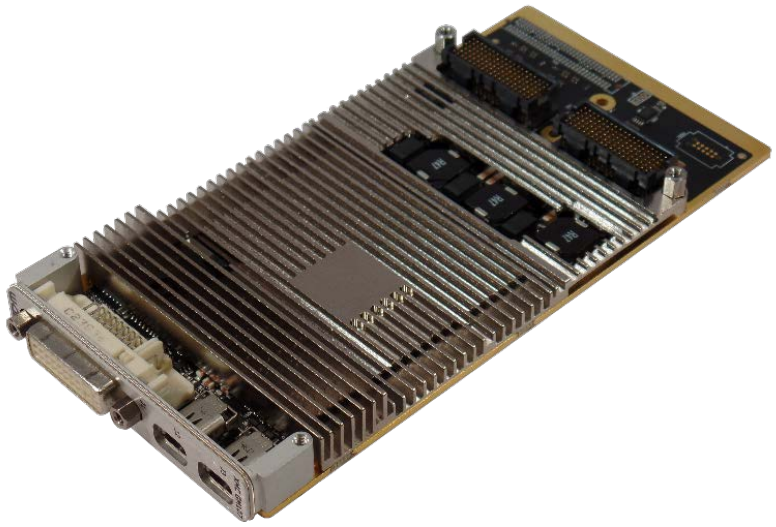

This is preliminary and subject to change.

WOLF- 3190 XMC Module

www.WOLFAdvancedTechnology.com

sales@wolf-at.com | International: +1 (905) 852-1163 | USA Toll-Free: 1 (800) 931-4114

XMC-E9170-SDI-2IO

WOLF ADVANCED TECHNOLOGY

PRELIMINARY INFORMATION

AMD EMBEDDED SOLUTIONS RADEON GRAPHICS

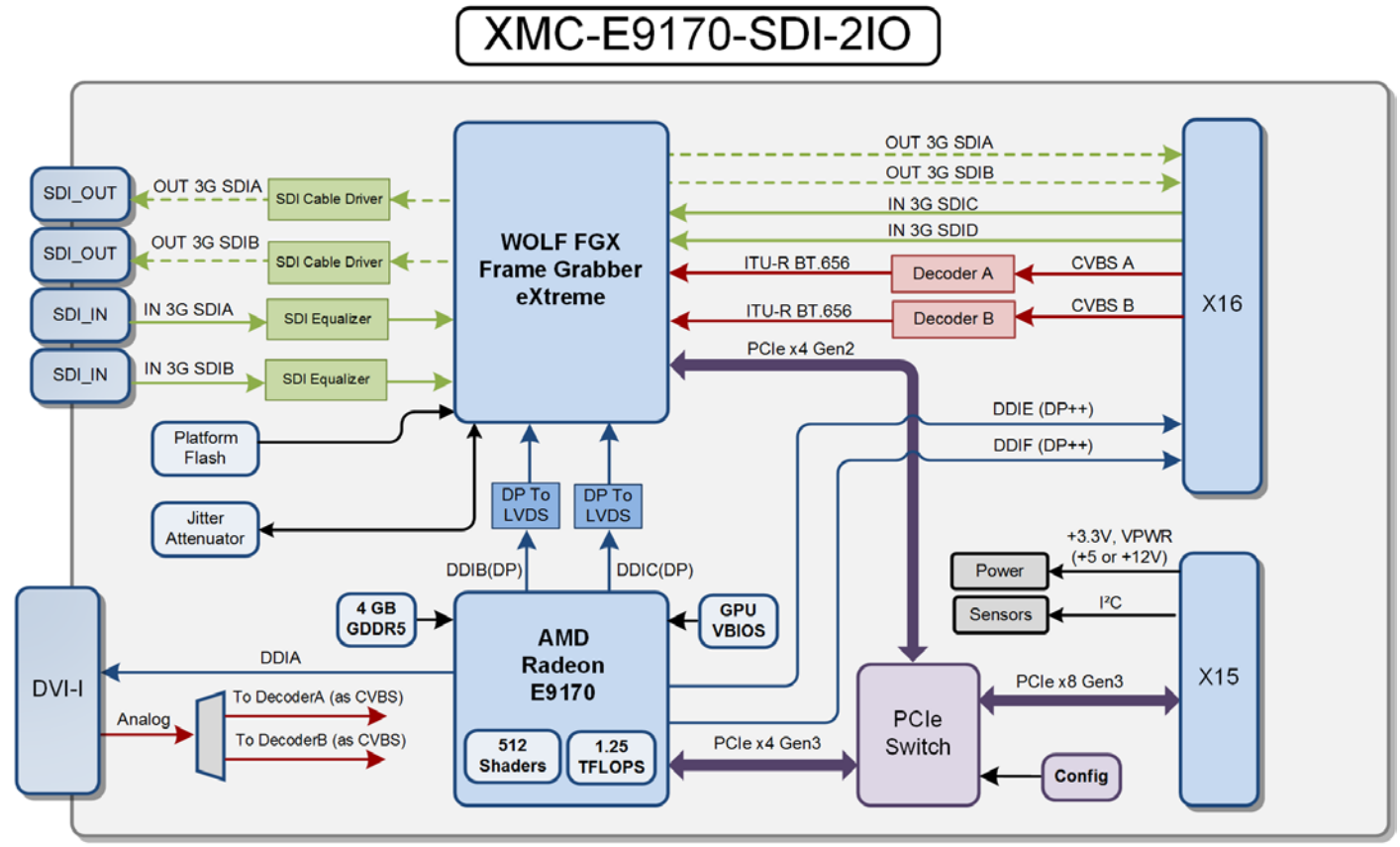

Front I/O
Air-Cooled Only

Inputs and Outputs:
- Up to 2 3G-SDI Inputs
- Up to 2 3G-SDI Outputs
- Additional Inputs: CVBS/STANAG 3350
- Additional outputs: DisplayPort, HDMI, Single Link DVI

WOLF-3190

This is preliminary and subject to change.

WOLF- 3190 XMC Module

www.WOLFAdvancedTechnology.com

sales@wolf-at.com | International: +1 (905) 852-1163 | USA Toll-Free: 1 (800) 931-4114

XMC-E9170-SDI-2IO

WOLF ADVANCED TECHNOLOGY

PRELIMINARY INFORMATION

DESIGNED FOR SYSTEM INTEGRATION

The XMC architecture is diverse, spanning custom carrier cards, VPX platforms and differing input / output methodologies. That is precisely why WOLF modules come with factory configuration options to solve virtually all system integration challenges. Typical options include PMC or XMC rear connectors, thermal dissipation threshold, module coating, to name a few.

This module supports VPWR of +5V or +12V, comes with configurable power control options, is configurable for ANSI VITA 42 (XMC 1.0) or ANSI VITA 61 (XMC 2.0), and can be configured for outputs to front and/or rear ports.

Further options are possible, such as pin mapping changes, PMC rear connector, enhanced cooling technologies and alternate video interfaces.

MANUFACTURING AND QUALITY ASSURANCE

WOLF stress tests to MIL-STD-810 (United States Military Standard for Environmental Engineering Considerations and Laboratory Tests) and MIL-HDBK-217 (Reliability Prediction of Electronic Equipment); Alternately will stress test to RTCA DO-160 (Environmental Conditions and Test Procedures for Airborne Equipment) on request.

WOLF products meet the following quality standards:

- ISO 9001:2015 (Quality management systems)
- IPC-A-610 CLASS 3 (Acceptability of Electronic Assemblies)
- IPC 6012 CLASS 3 (Qualification and Performance Specification for Rigid Printed Boards, Class 3 for High Reliability Electronic Products)
- IPC J-STD-001 Certified (Requirements for Soldered Electrical and Electronic Assemblies)

Boards are manufactured to meet the following standards:

- SAE AS9100D (Quality Management System - Requirements for Aviation, Space and Defense Organizations)
- SAE AS5553 (Counterfeit Electronic Parts; Avoidance, Detection, Mitigation, and Disposition)

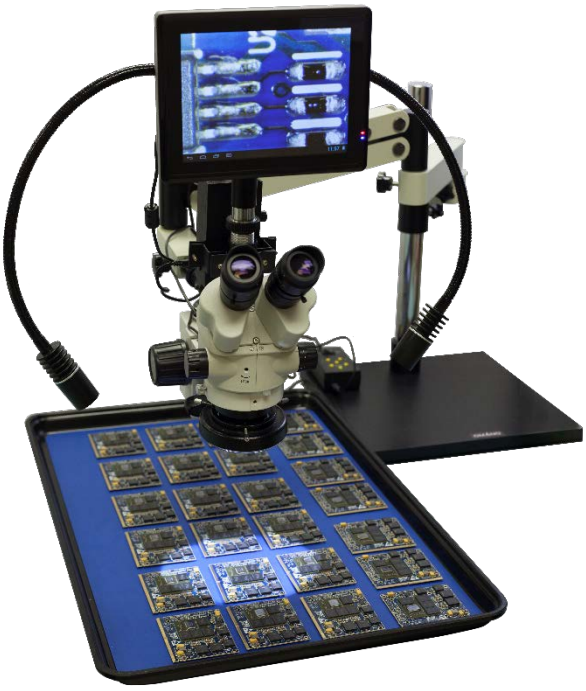

ITAR International Traffic in Arms Regulations Compliant

CGP 20072 Registered with Canada's Controlled Goods Program

UNITED STATES/CANADA JOINT CERTIFICATION PROGRAM (JCP)

GIDEP GOVERNMENT-INDUSTRY DATA EXCHANGE PROGRAM

This is preliminary and subject to change.

WOLF- 3190 XMC Module

www.WOLFAdvancedTechnology.com

sales@wolf-at.com | International: +1 (905) 852-1163 | USA Toll-Free: 1 (800) 931-4114