GE
Intelligent Platforms

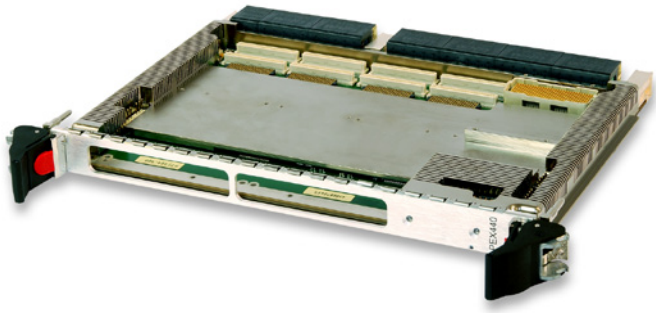

PEX440

6U VPX Mezzanine Carrier Card

Features

- 6U VPX and VPX-REDI form factors with optional front and rear side covers for 2 Level Maintenance requirements
- Supports up to three mezzanines
  - Two PMC/XMC modules
  - One AFIX module
- Mezzanine I/O routed to VPX backplane
- Non-blocking Gen 2 PCI Express switch with four x4 ports to the backplane
- Air and rugged conduction cooled variants

The PEX440 Mezzanine Carrier Card allows designers the flexibility to extend and expand the IO capability of their systems by supporting high bandwidth links to combinations of XMC's, PMC's and AFIX (additional Flexible Interface Xtensions) modules using PCI Express infrastructure.

Designed to complement the GE Intelligent Platforms range of SBC (Single Board Computer) and Multi Processor boards, the PEX440 supports up to two PMC/XMC modules and a further AFIX module.

Each PMC/XMC mezzanine site supports either a PMC with a high speed (133 MHz/64-bit) PCI-X interface or an XMC with a high speed (x8 lane) PCI Express interface. I/O may be routed from either the PMC or XMC connector to the backplane (in accordance with VITA 46.9).

PEX440 – 6U VPX Mezzanine Carrier Card

Specifications

Two PMC/XMC Extension Sites each supporting
- Two IEEE 1386/1386.1-2001 compatible extension slots
- XMC - x8 PCI Express
- PMC - up to 64 bit/133 Mhz PCI-X
- 5 V tolerant PCI signalling
- Rear IO tracked in accordance with VITA46.9

Option 1
- 64 pins from PMC and 12 differential pairs from XMC (P64sX12d)

Option 2
- 20 differential pairs and 38 single-ended from XMC (X20d38s)

AFIX Site
- Supports GE AFIX modules including Mil-STD-1553B, SCSI, Graphics, GPIO, Solid State Storage

PCIe Switch
- Gen 2 (backwards compatible with Gen 1)
- Choice of Link widths 4x4, 2x4 + 1x8, 2x8, 1x16 (Link widths of x1 and x2 are also supported)
- Designate any port to be the Upstream port
- Non-Transparent Bridging - program any port as Non-Transparent

Temperature sensor and ETI
- Elapsed Time Indicator (records cycles and on-time)
- On board temperature sensor

Power Supply Crowbar
- Clamps all on board supplies within 300uS in response to external input

VPX REDI Covers (optional)
- All enclosing front and rear side covers for 2 Level maintenance requirements

Board Management Microcontroller
- Enables remote board health monitoring

Power Requirements
- +5 V required
- ±12 V - only if required by mounted PMC module

Block Diagram

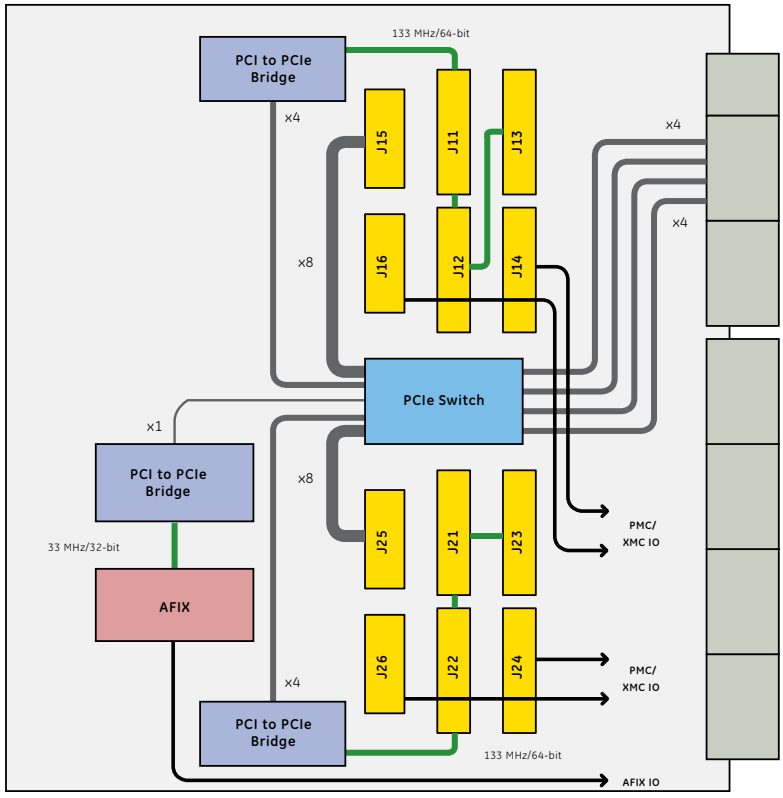

Environmental

	Level 1	Level 2	Level 3	Level 4	Level 5
Cooling Method	Convection	Convection	Convection	Conduction	Conduction
Conformal Coat	Optional	Standard	Standard	Standard	Standard
High/Low Temp Operational	0° / 55°C (300 ft/m)	-20° / +65°C (300 ft/m)	-40° / +75°C (600 ft/m)	-40° / +75°C at cold wall	-40° / +85°C at cold wall
Random Vibration	$0.002g^2$/Hz*	$0.002g^2$/Hz*	$0.04g^2$/Hz **	$0.1g^2$/Hz ***	$0.1g^2$/Hz ***
Shock	20g	20g	20g	40g	40g

* with a flat response to1000 Hz. 6 dB/Oct roll-off from 1000-2000 Hz

** from 10-2000 Hz

*** Pk Sawtooth 11 mSec Duration

About GE Intelligent Platforms

GE Intelligent Platforms is a division of GE that offers software, control systems, services, and expertise in automation and embedded computing. We offer a unique foundation of agile and reliable technology providing customers a sustainable competitive advantage in the industries they serve, including energy, water, consumer packaged goods, oil and gas, government and defense, and telecommunications. GE Intelligent Platforms is headquartered in Charlottesville, VA. For more information, visit www.ge-ip.com.

GE Intelligent Platforms Contact Information

Americas: **1 800 433 2682** or **1 434 978 5100**
Global regional phone numbers are listed by location on our web site at **www.ge-ip.com/contact**

www.ge-ip.com

12.12 GFA-1197A