GE Fanuc
Intelligent Platforms

VME-3125A Specifications

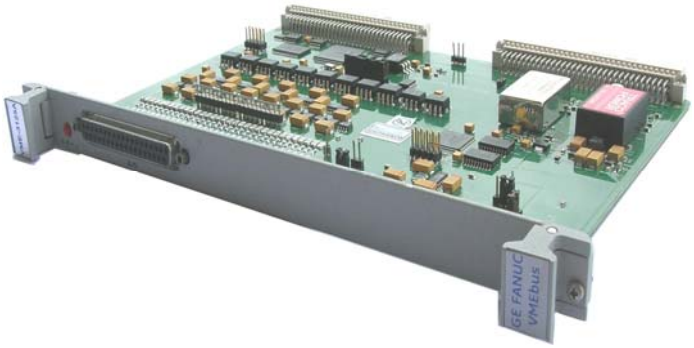

Isolated Scanning 12-bit 32-Channel Analog-to-Digital Converter Board (6U) with Built-in-Test (BIT)

Features:

- Thirty-two single-ended or sixteen differential inputs
- Auto-scanning; continuously digitizes inputs and stores results in dual-ported data registers
- Input ranges from ±50 mV to ±10 V Bipolar, or 0-100 mV to 0-10 V Unipolar or 0 to 25 mA Current I/P options
- Jumper-programmable gains of x1, x10, x100
- One 12-Bit A/D converter with built-in-track and hold
- No software initiation required to begin scanning
- Halt and lock scanning feature which enables ability of 40 KSPS of any channel (based on channel pointer)
- Selectable A/D ranges of ±5 V, ±10 V, 0 to +10 V
- 40 kHz aggregate conversion rate
- Supports real-time Built-in-Test
- Input connector compatible with both discrete wire and ribbon cables
- Selectable data coding; offset binary or two's complement
- Over voltage protected inputs
- Low pass input filters: 50 kHz, optional 40 Hz
- Pull-down resistors prevent floating inputs
- 1,000 V analog GND/digital GND isolator

Ordering Options							
July 26, 2009 800-9310003125-000 A		A	B	C	D	E	F
VME-3125A	–		0	0	0	0	

A = Input Option
0 = 50 kHz Input Filter (-3 dB Cutoff Frequency, Voltage Input)
1 = 40 Hz Input Filter (-3 dB Cutoff Frequency, Voltage Input)
2 = 250 Ω 0.01% Termination (High Accuracy Current Input)
3 = 500 Ω 0.01% Termination (High Accuracy Current Input)
BCDE = 0 (Options reserved for future use)
F = Conformal Coating
0 = Standard VME front panel without conformal coating
1 = Reserved
2 = Standard VME front panel with conformal coating
3 = Reserved

Compatible Cable Connector

Standard 37-pin subminiature D male connector
Discrete Wiring: AMP 747916-2 with 206478-4 shell
Ribbon Cable: AMP 747306-1

For Ordering Information, Call:
1-800-322-3616 or 1-256-880-0444 • FAX (256) 882-0859
Email: info.embeddedsystems@gefanuc.com
Web Address: www.gefanuc.com

Functional Characteristics

Introduction: VME-3125A provides isolated 12-bit analog-to-digital conversion for thirty-two single-ended analog voltage input channels (sixteen differential) on a 6U Eurocard for the VMEbus.

Selectable gain and A/D ranges support input voltage ranges from ±50 mV to ±10 V. Current input option supports thirty-two single-ended channels with 0 to 20 mA, 4 to 20 mA, and 5 to 25 mA ranges. To minimize system software overhead, all inputs are scanned and digitized continuously at an aggregate sample rate of 40,000 samples per second. Measurement data for each channel is constantly available to the VMEbus through a dual-ported Data Register. For voltage inputs, optional 40 Hz low pass input filters are available to minimize the effects of system noise. The standard unit comes equipped with 50 kHz low pass filters.

A jumper-selectable Programmable-Gain Amplifier (PGA) supports in-line voltage gains of x1, x10, or x100 for all channels. For voltage inputs, full-scale ranges for the A/D Converter are selectable as ±5 V, ±10 V, or 0 to +10 V. Data coding is software selectable as either offset binary or two's complement.

Inputs can be jumper configured either as sixteen differential voltage channels, or as thirty-two single-ended voltage or current channels. A single front panel 37-pin subminiature D provides connections for all input channels.

Figure 1 illustrates the internal functional organization of the VME-3125A board.

Operating Mode: All sixteen or thirty-two input channels are scanned continuously at the maximum sampling rate, and the resulting data is stored in dual-ported Data Registers for VMEbus access. Scanning starts automatically after any reset operation, and no other programming is required to start the A/D conversion process.

Built-in-Test Function (BIT): Operation of the PGA, ADC, and associated control logic can be verified by selecting the BIT operating mode. In this mode, an internal reference voltage is applied to the input of the PGA, bypassing the analog input multiplexer. All data channels read through the control interface will reflect the selected BIT reference voltage.

VMEbus Compliance: This product complies with VMEbus specification ANSI/IEEE STD 1014-1987 IEC 821 and 297, with the following mnemonics

A16:D16/D08 (EO) DTB Slave: 6U form factor

Board Address: The physical address is selected by onboard address jumpers, using VMEbus address lines A07 through A15. The VME-3125A board occupies 128 bytes of address space, and can be located on any 64-word boundary in the Short I/O (A16) space.

Address Modifiers: Address modifier bits are jumper selected and decoded to respond to Nonprivileged Short I/O access, Supervisory Short I/O access, or to both access privileges.

System Reset: A System Reset establishes the following board status:
- Automatic scanning of all channels
- Front panel diagnostic LED indicator ON
- Offset Binary Data Format.

Front Panel System Diagnostic LED: A software-controlled front panel LED turns ON at System Reset, and can be turned OFF under software control to provide an external indication that Built-in-Test has been completed.

Analog Input Data Format: Analog inputs are digitized and stored in thirty-two dual-ported Data Registers (sixteen registers for differential operation) as 12-bit right-justified digital values.

Software-selectable data codes are Offset Binary and Two's Complement. In two's complement coding, the sign bit (D11) is extended through the most significant bits of the Data Register (D12 through D15).

Input Characteristics

(At +25 °C and rated power supplies unless otherwise noted.)

Number of Channels: thirty-two single-ended or sixteen differential voltage input channels
thirty-two single-ended current input channels.

Voltage Ranges: ±50 mV to ±10 V, bipolar or 0 to +100 mV, 0 to +10 V unipolar[1]. Factory configured for ±10 V input range.

Current Termination: The applicable configuration is unipolar, single ended, 0-10 V and Gain X 1 only.

250 Ω 0.01%
500 Ω 0.01%,

[1] Input voltage range is determined: INPUT RANGE = A/D RANGE + A/D GAIN.

Current Range: Applicable input ranges as per termination

For 250 ohm	For 500 ohm
0 to 20 mA 4 to 20 mA 5 to 25 mA	0 to 20 mA 4 to 20 mA

Input Impedance: For voltage input options[2].

Power	DC-Diff	DC-CM	AC-Diff	AC-CM
ON	27M ohm	1.3M ohm	9K ohm	9K ohm
OFF	11K ohm	6K ohm	9K ohm	5K ohm

Input Bias Current: 44 nA Min/90 nA max

Input Bias Current Drift: 0.30 nA/Deg C

Common-Mode Voltage (CMV): ± 11 V, maximum CMV for differential inputs with zero input signals. CMV is referenced to an analog ground common to all inputs. With other gains, the formula is ±11 V= (V_{CM} + V_{diff}/2)*gain

Common-Mode Rejection Ratio (CMRR): Minimum/Typical CMRR in dB for differential inputs with 350 Ω source unbalance, DC-60 Hz:

Gain	ADC Range	DC I/P	AC I/P
1	±10 V	60/65	45/52
	±5 V	60/65	49/52
	0-10 V	65	52/55
10	±10 V	80/85	80
	±5 V	80/85	80
	0-10 V	82/85	85
100	±10 V	92/94	92/94
	±5 V	85/88	88/92
	0-10 V	92/92	92/94

*The above readings are for 50 kHz filter

Input-to-VMEbus Isolation: 1,000 VDC

Input Noise: Maximum noise referred to input, 10 to 1,000 Hz, at 3σ[3]: These readings are taken in single ended mode only. All the readings are in mV p-p.

Gain	±10 V	±5 V	0-10 V
1	5.00	2.48	2.48
10	0.500	0.27	0.27
100	0.100	0.080	0.080

*Based on 1024 samples

[2] To prevent isolated differential signal sources from floating beyond the input CMV range, a pull-down resistance of approximately 22M Ω is provided between each input pin and analog return.

[3] 3σ includes 99.7 percent of all noise in a normal distribution.

Bandwidth, Each Input: DC-to-Fc, where Fc is 50 kHz for the 50 kHz filter or 40 Hz for the 40 Hz filter option unit.

Input Filter: Single-pole passive low pass filter: -3 dB at 50 kHz or 40 Hz ±20 percent (voltage input options only)

Over voltage Protection: ±40 V maximum sustained, power applied; ±25 V power removed.

Transfer Characteristics

(At +25 °C and rated power supplies unless otherwise noted.)

Measurement Resolution: 12 bits

Channel Scan Rate: 40 KSPS (Kilosamples per second) minimum aggregate rate

Voltage Transfer Function: $E_{IN} = E_{LO} + E_{FSR} x \frac{N_{ADC}}{4{,}096}$

Where:
E_{IN} = Input voltage
E_{FSR} = Full-scale input range
E_{LO} = Lower end of input range
N_{ADC} = A/D Converter reading

Example: For an N_{ADC} value of 0B33 HEX (2,867 decimal) in the ±5 V range:

E_{IN} = −5.000 + [10.000 x (2,867/4,096)];
= +2.000 Volts

Current Transfer Function: $I_{IN} = \frac{E_{FSR} x N_{ADC} / 4{,}069}{R_{TERMINATION}};$

Where:
I_{IN} = Input current in amps
E_{FSR} = 10 V unipolar
N_{ADC} = A/D Converter reading
$R_{TERMINATION}$ = 250 Ω or 500 Ω option

Example:

For an N_{ADC} value of 0800 HEX (2,048 decimal) with a 250 Ω termination: I_{IN} = [10 x (2,048/4,096)]/250; = 20 mA

A/D Converter Input Range: ±5 V, ±10 V, 0 to +10 V; jumper selectable[1]

A/D Converter Input Gain: x1, x10, x100 (±0.3 percent, jumper selectable) [1, 4]

Accuracy[4]: Maximum Error

Voltage Input = ±0.04 percent reading ±0.03 percent range ±2.0 mV

Current Input (-200, -300 option) = ±0.05 percent reading ±0.03 percent range ±2.44 μA

[4] Indicated accuracy applies after calibration at the selected input voltage range. To maintain full accuracy, calibration should always be performed if the range or gain is changed.

Voltage Example: For a +2.000 V reading in the ±5 V range:
Maximum Error= ±0.8 mV ±3.0 mV ±2.0 mV = ±5.8 mV

Temperature Stability:

For Voltage input board options (mV/deg Celsius)

±30 PPM Reading ±25 PPM Range ±20 µV

For Current input board options (µA/deg Celsius)

±40 PPM Reading ±25 PPM Range ±20 nA

Long-Term Drift, per 1,000 hr = ±50 PPM Reading ±45 PPM Range ±100 µV

Interchannel Crosstalk: Typical/Maximum values in dB. Below readings are for ±10 V Bi-polar, Gain X1 Differential modes.

Option	DC I/P		AC I/P	
	Adj Ch	Alt Ch	Adj Ch	Alt Ch
0XXXXX	65/71	65/71	59/65	59/65
1XXXXX	65/71	71/71	65/65	65/65

BIT Reference Voltage: Software selectable as 0.000 V, +4.980 V, +0.4928 V, 9.91 mV

BIT Reference Accuracy: ±30 mV ±30 PPM per °C (4.98 VDC)

Physical/Environmental Specifications

Dimensions: Standard VME double height board
160 x 233.5 mm

Power Requirements: +5 VDC (±5 percent) at 1.5 A maximum

Temperature:
Operating: 0° to +65 °C
Storage: -40° to +85 °C

Humidity:
Operating: relative humidity 20% to 80%, noncondensing

Cooling: Forced air convection (standard VME slot)

MTBF: Contact Factory

Input Connector (P3): 37-pin subminiature **D** female connector

Trademarks

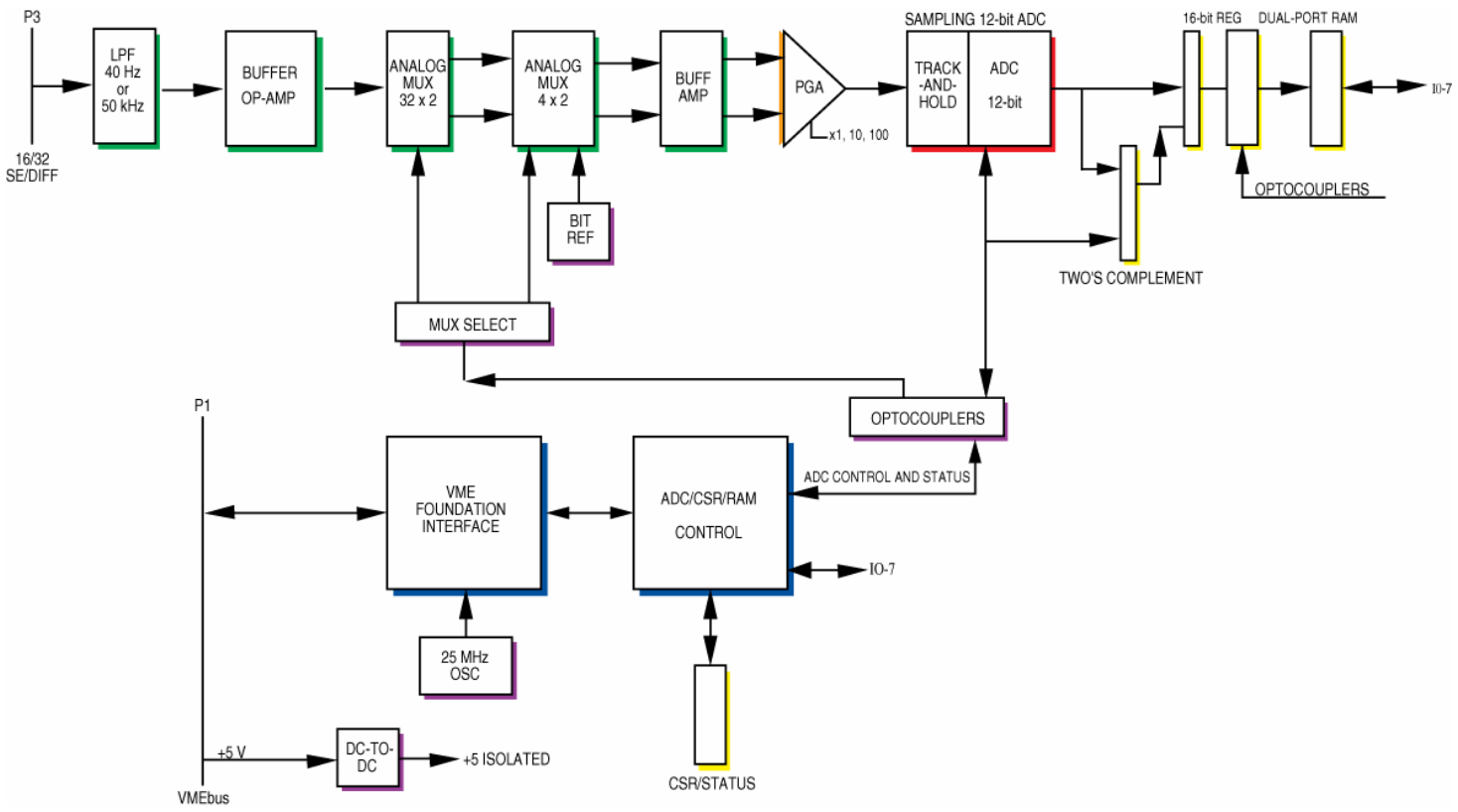

Figure 1 VME-3125A Functional Block Diagram

GE Fanuc Intelligent Platforms
Information Centers

Americas:
1 800 322 3616 or 1 256 880 0444

Asia Pacific:
86 10 6561 1561

Europe, Middle East and Africa:
+49 821 5034-0

Additional Resources

For more information, please visit the
GE Fanuc Intelligent Platforms web site at:
www.gefanuc.com