GE Fanuc
Intelligent Platforms

VME-3113B Specifications

Scanning 12-bit Analog-to-Digital Converter Board with Built-in-Test

Features:

- 64 differential or single-ended inputs
- Powers up in autoscanning mode — no software initialization required
- Continually digitizes input channels and stores the results in a dedicated channel dual-port register (autoscanning mode)
- Jumper-selectable scanning of 2 to 64 channels
- Supports real-time and off-line Built-in-Test
- Five operating modes plus test mode
  - — Autoscanning mode (gain=1)
  - — Random poll mode
  - — Random interrupt mode
  - — Scanning poll mode
  - — Scanning interrupt mode
- VMEbus interrupts may be programmed to interrupt upon completion of a single A/D conversion or upon completion of a 2- through 64-channel scan
- User-programmable interval timer supports scanning of all channels at periodic intervals
- Jumper-programmable gain 1, 10, 100, 200, and 500
- Selectable A/D ranges of 0 to +10 V , ±5 V, and ±10 V
- Low-level and high-level inputs: ±10 mV to ±10 V
- Optional low pass filter (the VME-3113B has improved high-frequency rejection characteristics)
- Overvoltage protected inputs
- $5 \times 10^6\ \Omega$ input impedance
- 33 kHz conversion rate
- Selectable output code: offset binary, two's complement with sign extension
- Applications
  - — Factory automation and instrumentation
  - — Process control
  - — Laboratory instrumentation
  - — Machine monitoring
  - — Data acquisition

Ordering Options							
Feb 26, 2009 800-9320003113-000 B		A	B	C	D	E	F
VME-3113B	–			0	0	0	

A = Input Filter Options
0 = No Filter
1 = 40 Hz (3 dB Cutoff Frequency)
B = Input Type
0 = Differential Input
1 = Single Ended Input
CDE = 0 (Options reserved for future use)
F = Conformal Coating
0 = Standard VME front panel without conformal coating
1 = Reserved
2 = Standard VME front panel with conformal coating
4 = Reserved

Connector Data

Style	Recommended Connecting Component	P3 and P4 I/O Connectors
64-pin IDC	Mating Connector (64-pin) Strain Relief (for 64-pin Connectors)	Panduit 120-964-435E Panduit 100-000-032
96-pin Discrete Wire	Mating Connector (96-pin Discrete) Female Crimp Contacts (96-pin Discrete)	AMP 925486-1 AMP 530151-6*
	Connector Housing (For 96-pin Connectors)	Hurting 09 03 096 0501
96-pin IDC	Mating Connector (96-pin Mass Terminated)	ERNI 913.031
	0.033-inch Ribbon Cable (96-pin Mass Terminated)	ERNI 913.049
	Strain Relief Insert (0.033-inch Ribbon Cable)	Harting 09 02 000 9912
	Connector Housing (For 96-pin Connectors)	Harting 09 03 096 0501

PC Board I/O Connector Part Number Panduit 101-096-033A

*AMP crimp tool part number 90301-2.

For Ordering Information, Call:
1-800-322-3616 or 1-256-880-0444 • FAX (256) 882-0859
Email: info.embeddedsystems@gefanuc.com
Web Address: www.gefanuc.com

Functional Characteristics

Introduction: This product is designed to support 64 channels of differential or single-ended wide range (±10 mV to ±10 V) analog inputs.

The board supports the following operating modes which are described below:

Autoscanning
Random Polling
Random Interrupt
Scanning Poll
Scanning Interrupt
Autoscanning with BIT

A 64-word dual-port provides storage for a continuous scan of all channels. The scanning modes are executed automatically at powerup, system reset, or are entered under program control. The dual-port registers allow VMEbus access at any time to read the latest stored data.

A jumper-selectable, Programmable Gain Amplifier supports gain ranges of 1, 10, 100, 200, and 500. A/D conversion time is 15µs. A low pass filter is also supported.

A functional block diagram is provided in Figure 1 in on page 5 of this specification.

Operating Modes

Autoscanning Mode: The mode is executed by a powerup system reset or program selection. All channels are continuously scanned and the digitized data is stored in 64, 16-bit dual-port registers. No other programming is required to start the A/D conversion process. The user has only to read the digitized data from the dual-port register of the desired channel. This mode is for gains of 1 only and for a minimum of 16 connected channels.

Random Polling Mode: This mode requires the controlling program to generate a single conversion. End-of-conversion is determined by polling an end-of-conversion status bit.

Random Interrupt Mode: This is the same as Random Poll Mode except end-of-conversion generates an interrupt to the board.

Scanning Poll Mode: This is a scanning mode which executes a single scan of all channels. An end-of-scan control bit is polled to determine when the scan is completed.

Scanning Interrupt Mode: This is a scanning mode which executes a single scan of all channels and generates an end-of-scan interrupt when the scan is completed.

Autoscanning Bit Mode: All channels continuously scanned with channel 0 muxing in one of three precision reference voltages. The voltages are 4.980, 0.4928, and 0.009915V.

Programmable Interval Timer: A triple, 16-bit timer (may be cascaded to 48 bits) is programmable to generate a periodic trigger to start an A/D scan.

External Trigger: A user-connected signal may be used to start a scan.

Programmable Gain Amplifier: A jumper Programmable Gain Amplifier supports conversions of low-level inputs (from ±10 mV to ±10 V full scale).

End-of-Conversion/Scan Interrupts: The Scanning Interrupt Mode and the Random Scanning Mode generate an end-of-conversion or end-of-scan interrupt, respectively. All VMEbus interrupt levels 1 to 7 are supported through a user-programmable on-board Bus Interrupter Module (BIM).

Compatibility: The ADC board is a standard double height printed circuit board which is compatible with the VMEbus specification (Rev. C.1).

Board Address: The physical address for the board may be selected by on-board jumpers. VMEbus address lines A08

through A15 are decoded for board selection. The board occupies 256 bytes in the short I/O address space.

Address Modifier: Address modifier bits are jumper-selected and decoded to support either nonprivileged short I/O, supervisory short I/O, or both. The board is factory configured for supervisory short I/O.

Analog Input Format: Analog inputs are digitized and stored in 64 dual-port registers as a 12-bit digital value (D11 to D00) which may be read by the user. Selectable data codes are offset binary and two's complement. The sign is extended to the upper four bits (D12, D13, D14, and D15).

System Reset: System reset automatically places the board in the Autoscanning Mode.

Front Panel Diagnostic LED: A software-controlled LED may be extinguished upon successful completion of diagnostics. The LED is illuminated by system reset.

Electrical Specifications

(Typical at +25°C and rated power supplies unless otherwise stated.)

Input Characteristics

Number of Input Channels: 64 differential or 64 single-ended

Full-Scale A/D Input Ranges: ±5 V, ±10 V, and 0 to +10 V

Amplifier Gain Ranges: 1, 10, 100, 200, and 500 Jumper-programmable

Full-Scale Input Range: ±10 mV to ±10 V

Input Impedance (Minimum):

Condition	DC-Dif	DC-CM	AC-Dif	AC-CM
Power ON	5 M	2 M	1.2 M	720 K
Power OFF	5 K	4 K	11 K	3.8 K

Impedances are provided for no filter differential input option. AC impedance measured at 1 kHz

Input Bias Current: Typical/Maximum 5/11 nA

Common-Mode Voltage (Maximum):
±11 V (V_{CM} + V_{diff}/2)*gain)

Input Overvoltage Protection: ±40 V, maximum*

*One Channel at a time

Optional Single-Pole Analog Input Filter: -3 dB at 19 Hz

This value applies for differential inputs. Frequency doubles for single ended (Pseudo differential) applications. The cutoff frequency has a tolerance of 25%. Typical input band width (20 V P-P) is 5 kHz.

Transfer Characteristics

Resolution: 12 bits

Analog Input Acquisition Time:
G = 1, 10, 100, 200 15µs
G = 500 28µs

A/D Conversion Time: 15µs

A/D Conversion Rate (Maximum):
G = 1, 10, 100, 200 33 kHz
G = 500 23 kHz

Channel Conversion Rate (Maximum):
G = 1, 10, 100, 200 33 kHz ÷ number of channels scanned
G = 500 23 kHz ÷ number of channels scanned

Input Noise (mV):

Gain	±10 V	±5 V	0 to 10 V
1	2.034	1.526	1.017
10	0.203	0.153	0.102
100	0.031	0.025	0.025
200	0.020	0.018	0.018
500	0.012	0.011	0.011

Based on 1024 samples

Accuracy

System Accuracy (% of FSR) (Including Linearity Error):

Gain	±10 V	±5 V	0 to 10 V
1	0.035	0.035	0.035
10	0.035	0.035	0.035
100	0.040	0.069	0.060
200	0.050	0.100	0.087
500	0.083	0.196	0.168

Based on average of 1024 samples

Inter channel crosstalk (DC to 1 kHz): 52 dB

Stability (Over Temperature)

System Accuracy Drift in (uV):

Gain	Offset Drift (uV)	Gain drift (uV of FSR)
1	210	20
10	21	22
100	6	8
200	6	8
500	4	4

Example: For a +3.000 V reading in the ±5 V range, Gain1:
Temperature drift = ±210 µV ± 12 µV = ± 222 µV

Bus Interface

Compatibility: VMEbus A16: D16

Interrupt: IRQ1 through IRQ7

Interrupter Release: ROAK (Release-on-Acknowledge)

Physical/Environmental Specifications

Dimensions: Standard VME double height board
160 x 233.5 mm

Power Requirements: +5 VDC (±5 percent) at 2 A Max

Temperature: Operating: 0 to 55° C
Storage: -25 to +85° C

Altitude:
Operating: 0 – 10,000 ft (3,000 m)
Storage: 0 – 40,000 ft (12,000 m)

Humidity:
Operating: relative humidity 20% to 80%, noncondensing

Cooling: Forced air convection

Front Panel Analog Input Connector: Board connector (P3 and P4) - 96-pin DIN connector, center row grounded. Accepts 64- and 96-pin mating connectors (see mating connector data on page 2).

Trademarks

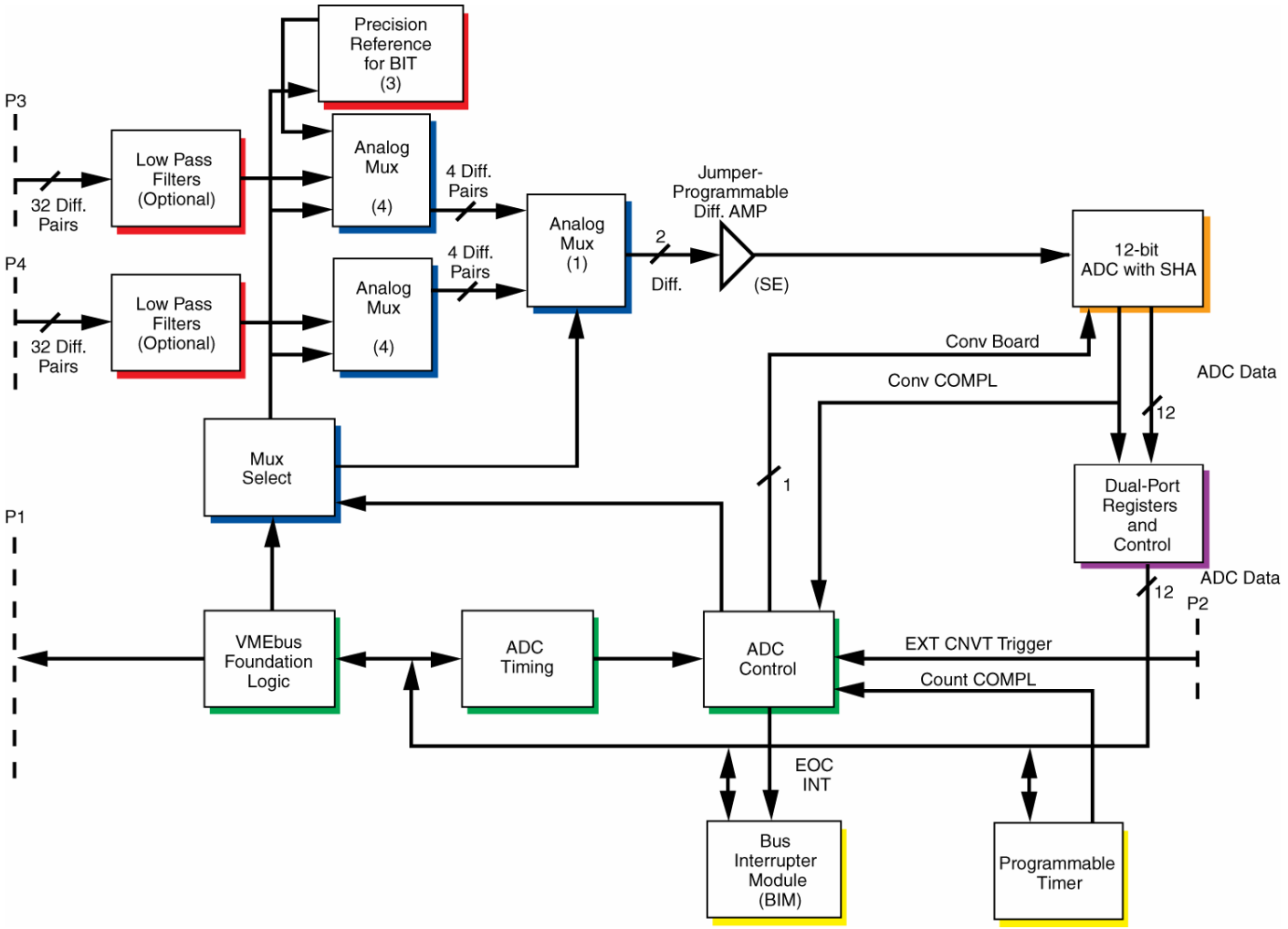

Figure 1 VME-3113B Functional Block Diagram

GE Fanuc Intelligent Platforms
Information Centers

Americas:
1 800 322 3616 or 1 256 880 0444

Asia Pacific:
86 10 6561 1561

Europe, Middle East and Africa:
+49 821 5034-0

Additional Resources

For more information, please visit the GE Fanuc Intelligent Platforms web site at:
www.gefanuc.com