GE
Intelligent Platforms

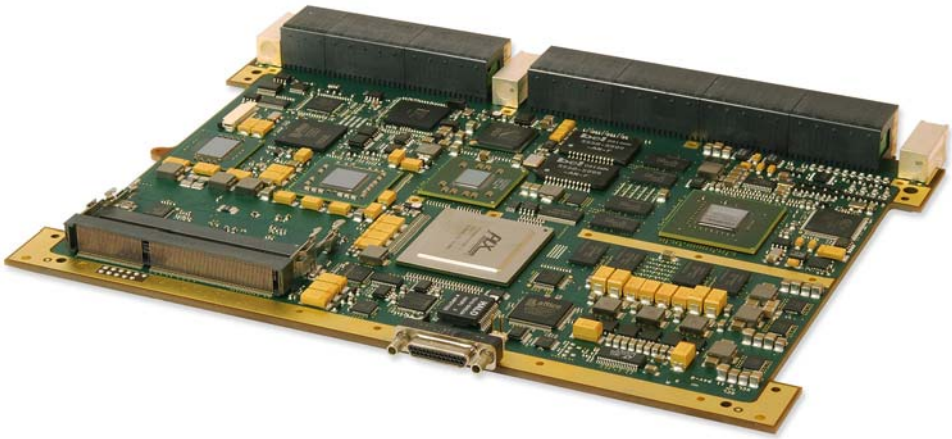

IPN251

6U OpenVPX GPGPU Multiprocessor

Features

- OpenVPX
  - 6U rugged VITA 46 / VITA 48 REDI / AFT
- Multi-fabric data, expansion and control planes
  - 2x 10 Gigabit Ethernet/InfiniBand®
  - x16 PCIe Gen 2
  - 4x 1-Gigabit Ethernet
- GPU
  - NVIDIA 384-core "Kepler" EXK107
- CPU
  - 3rd Generation Intel® Core i7
- XMC Site
- Software
  - BIOS, Linux, Windows
  - NVIDIA CUDA, OpenCL, OpenGL
  - NVIDIA GPUDirect
  - AXISLIB VSIPL Math & DSP libraries
  - NVIDIA PhysX
  - MATLAB

The IPN251 is the second generation 6U OpenVPX multiprocessor module combining the latest NVIDIA 384-core "Kepler" GPU with the 3rd Generation Intel Core i7 CPU, yielding maximum processing performance in a rugged, single VPX slot.

Targeting a wide range of data-intensive applications, particularly in the Intelligence, Surveillance and Reconnaissance (ISR) domain, the IPN251 delivers the highest available bandwidth between its major components.

The 3rd Generation Intel Core i7 CPU and the GPU are connected via a 16-lane PCI Express Gen 3 switch, which also provides a 16-lane PCI Express Gen 2 port to the VPX expansion plane, and provides a 8-lane PCI Express Gen 3 port to a dual-channel 10 Gigabit Ethernet & InfiniBand NIC. The PCIe switch also provides a Gen 2 x8 port to an XMC site.

The 384-core GPU, utilizing NVIDIA's "Kepler" architecture, has 2048 MB of GDDR5 memory to ensure high-capacity and high-bandwidth access to data during "massively parallel" GPGPU algorithm processing.

Using NVIDIA's GPUDirect, data from external sources can be streamed directly into GPU memory without the burden of multiple copy operations through system memory, resulting in significantly lower latency and higher throughput. Data sources may be PCI Express or InfiniBand end-points.

The dual-channel 10 Gigabit / InfiniBand NIC also allows complex open-architecture systems to be constructed, using OFED RDMA to transfer data in and out of the 16 GB system memory with very low latency and minimal CPU overhead.

With a wide range of open-standard software available for the IPN251, Systems Integrators can rapidly port and deploy their existing code onto this rugged platform allowing fast-to-market solutions.

The IPN251 is available in a range of air- and conduction-cooled extended temperature build standards, with versions to satisfy VITA 46, VITA 48 and VITA 48.5 air flow through.

The product is designed to fit into GE's High Performance Embedded Computing (HPEC) solution set, allowing sophisticated application-targeted systems to be architected. The solution set includes:

- SBC625 – 3rd Generation Intel Core i7 SBC
- GBX460 – 10 Gigabit Ethernet Switch
- DSP280 – Dual quad-core multiprocessor
- Wide range of I/O
- AXIS Multiprocessing Software
- Development chassis
- Rugged deployable chassis

IPN-251 6U OpenVPX GPGPU Multiprocessor

Specifications

Graphics Processing Unit
- NVIDIA 384-core "Kepler" EXK107
- 2048 MB GDDR5 SDRAM
- As used on NVIDIA GT 650M

Central Processing Unit
- 3rd Generation Intel Core i7 Quad-core @ 2.3 GHz
- 16 GB DDR3 with ECC
- 8 GB flash

Multi-fabric architecture
- P1 data plane: 2x 10GbE / InfiniBand
- P2 expansion plane: x16 Gen 2 PCIe
- P4 control plane: x2 1GbE
- P4 control plane: x2 1Gb BX

CPU I/O
- GbE, 3 x1 PCIe, 4x USB, 2x SATA, 2x Serial ports
- 8x GPIO, Stereo line-in/line out
- Front I/O: 1x 1GbE, 2x COM ports
- TPM

GPU I/O
- Two channels of VGA
- Two channels of DVI
- Support for legacy RGsB / RS-170

Form Factor
- 6U OpenVPX
- VITA 46, VITA 48

Ruggedization
- Air cooled levels 1, 2 & 3
- Conduction cooled levels 4 & 5
- Air flow-through VITA 48.5, level 8

OpenVPX
- SLT6-PAY-4F1Q2U2T-10.2.1
- MOD6-PAY-4F1Q2U2T-12.2.1-8

Block Diagram

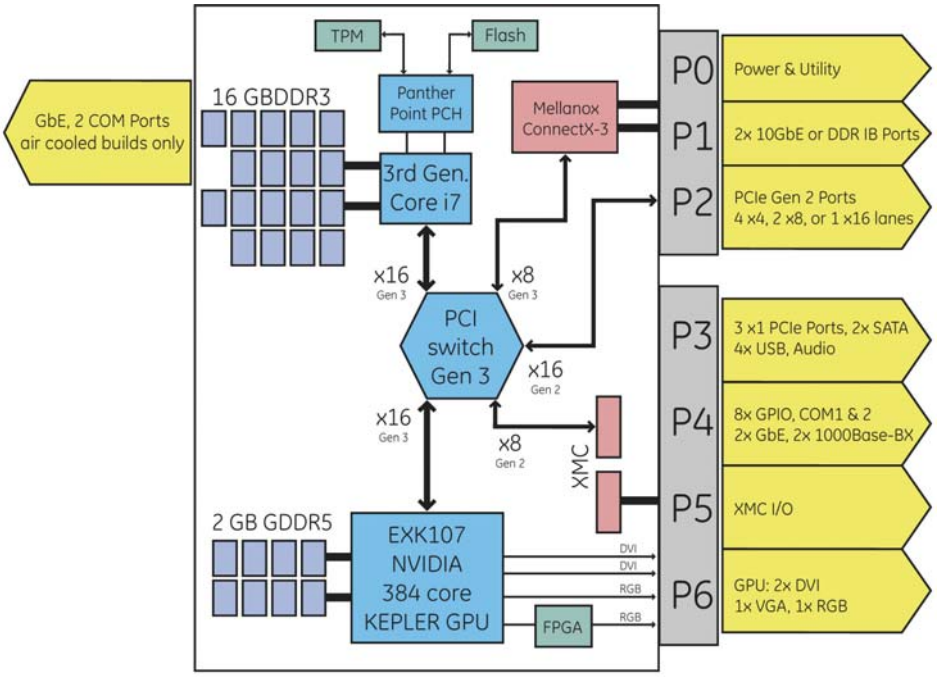

About GE Intelligent Platforms

GE Intelligent Platforms is a division of GE that offers software, control systems, services, and expertise in automation and embedded computing. We offer a unique foundation of agile and reliable technology providing customers a sustainable competitive advantage in the industries they serve, including energy, water, consumer packaged goods, oil and gas, government and defense, and telecommunications. GE Intelligent Platforms is headquartered in Charlottesville, VA. For more information, visit defense.ge-ip.com.

GE Intelligent Platforms Contact Information

Americas: **1 800 433 2682** or **1 434 978 5100**

Global regional phone numbers are listed by location on our web site at http://defense.ge-ip.com.

defense.ge-ip.com/gpgpu

03.13 GFAxxxx